科

PD29-02XX-2XX

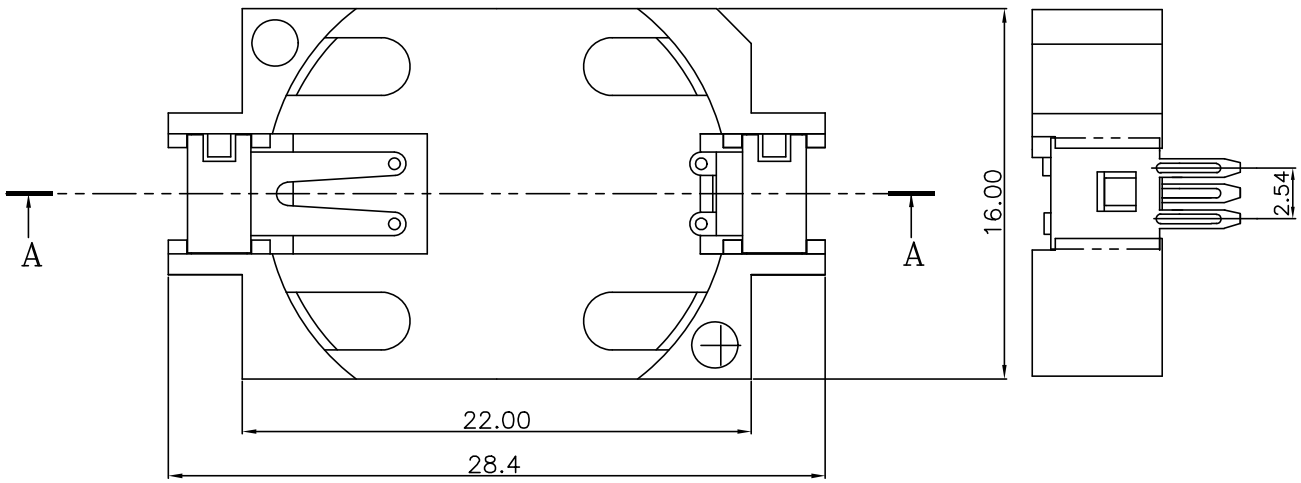

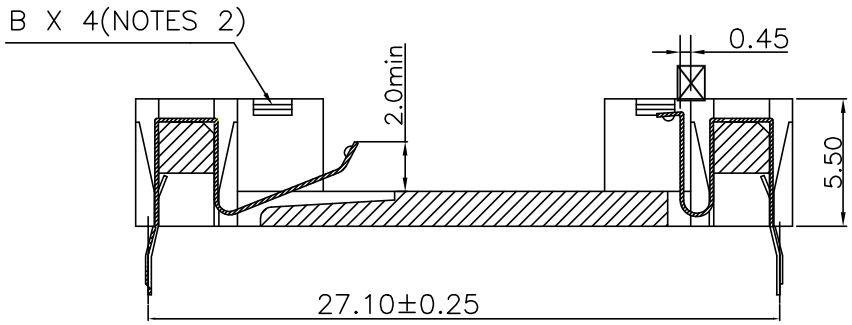

SECTION A-A

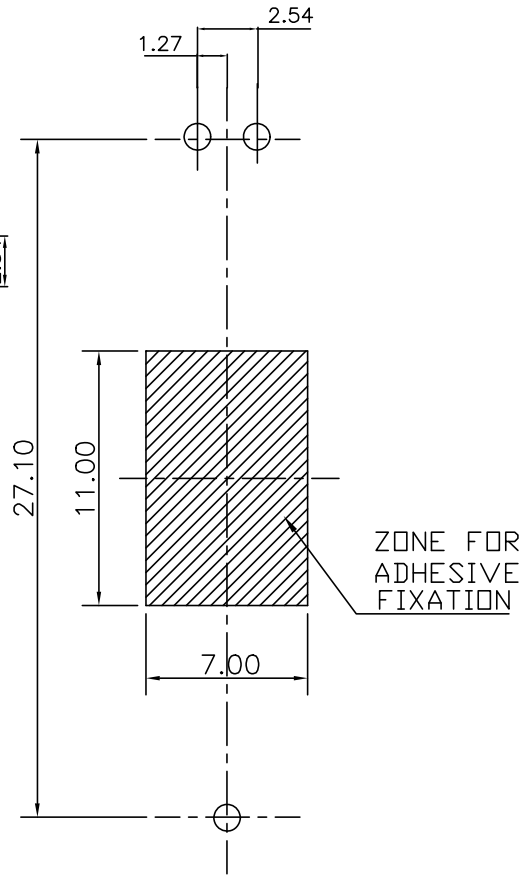

PCB LAYOUT

NOTES
1.MATERIALS: HOUSING-LCP 30%GF UL94V-0.
CONTACT-PHOSPHOR BRONZE C5191R-H.
2.PART NO.
PD29 - XX X X -2XX

BATTERY TYPE

COLOR:
1. WHITE

PLATING:
1.Sn/Pb 120u"MIN
OVER Ni 60u"MIN.
G: Lead Free

NULL:WITH LOGO GS
A:WITHOUT LOGO

PACKAGE TYPE:
2:TRAY GENERAL TYPE
3:TRAY FOR AUTOMATIC
PICK-AND-PLACE.
4.EMBOSSED TAPE PACKAGING
OF SMT BATTERY HOLDER

P/N # PD29-02xx

REV	Revision Record	Date	REV	Revision Record	Date
			A	RELEASE	04/12/02

Revise Only On Cad System

CUSTOMER DRAWING

UNIT: mm

General Tolerances: Angle: ±3° Dim: 0.0 ±0.30, 0.00 ±0.25, 0.000 ±0.10

Drawn by

Chk'd by

Appr'd by

Scale 3 : 1

Wellco T&C Co., Ltd.

Date: 04/12/02' Sheet: 1 OF 1

Eng. NO: KY007-90° REV: A

Title: BATTERY HOLDER DIP ASS'Y 2032