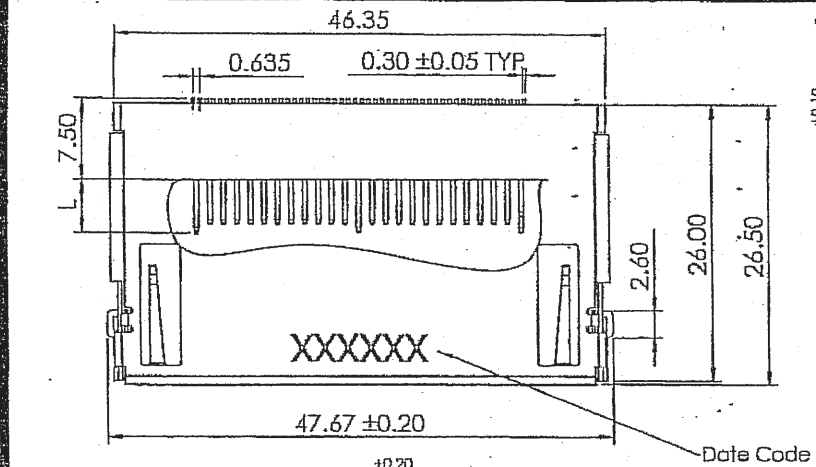

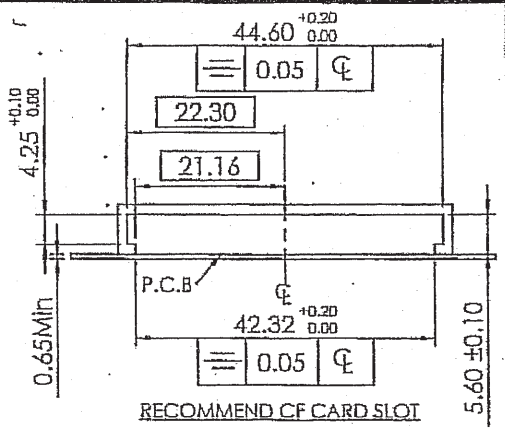

RECOMMEND CF CARD SLOT

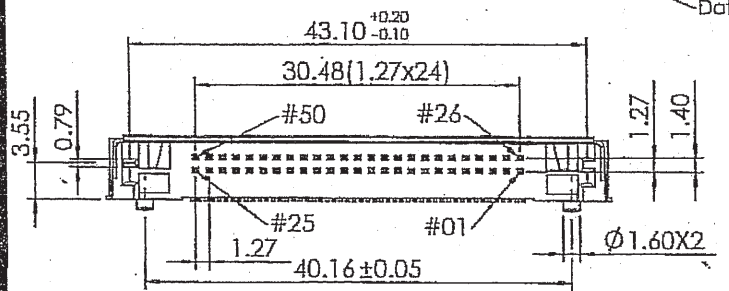

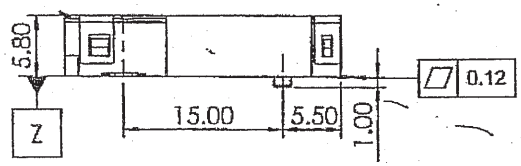

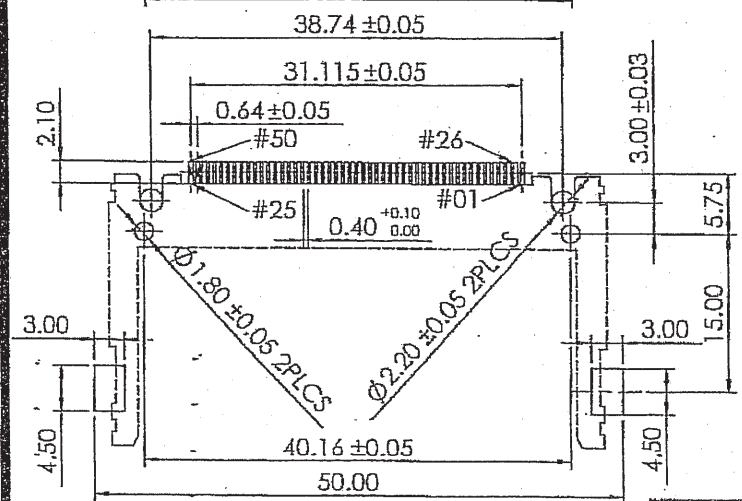

Recommend P.C.B Layout

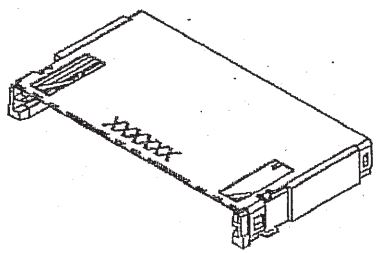

PIN NUMBER	DIM. L ±0.10
25 , 26	3.50
ALL OTHER PINS	4.25
1 , 13 , 38 , 50	5.00

機密文件

REV.	MODIFICATION	DRAWN	APPROVED
K	EN110206	陳書香	leo

NOTES:

1. MATERIAL:
   INSULATOR : HIGH TEMPERATURE THERMOPLASTIC
   FLAMMABILITY RARING : UL94V-0
   CONTACT : COPPER ALLOY
   GROUND MOUNT EAR : COPPER ALLOY
   COVER : STAINLESS STEEL

2. PLATING :
   CONTACT AREA : GOLD OVER NI
   UNDER PLATING : NICKEL OVERALL
   SOLDER TAIL AREA : TIN/LEAD OVER NI
   GROUND MOUNT EAR AREA : TIN/LEAD OVER NI

3. SOLDERTAIL TO BE WITHIN 0.05 UPWARD AND 0.2 DOWNWARD FROM Z-DATUM PLACE, AND COPLANARITY OF SOLDERTAILS TO BE WITHIN 0.12mm

4. PART NO :
   CFH050-X X- X 3 X 6

COVER-G:cover入口上細有彈片
T:cover入口無上細有彈片

Logo:
1:Type 1 Reverse,W/O Logo
5:Type 1 Reverse,With Logo

Color:
0:Black
7:Ivory

Plating:
0:Gold Flash
2:10u"Gold
Unlead Plating:
A:Gold Flash
C:10u"Gold

NOV 0 6 2011 ISSUE ENG. DEPT.

GENERAL TOLERANCE	
X± 0.40	X.°± 5°
X± 0.30	X°± 2°
XX± 0.20	XX°± 1°
XXX± 0.10	XXX°± 0.5°

Wellco T&C Co., Ltd.

TITLE: CF HEADER TYPE I CONNECTOR LOW PROFILE TYPE WITH COVER (Reverse)

CUSTOMER DRAWING

PART NO. CFH050-XX-X3X6

DWG NO. CFH050-80-K

APPROVAL: leo | CHECKED: Tom | DRAWN: 陳書香 | UNIT: mm | SCALE: NONE | SHEET 1 / 1 | REV. K

RoHS PROCESS COMPLIANT

1.THIS PRODUCT DOESN'T CONTAIN ENVIRONMENTAL HAZARDOUS MATERIALS PER DIRECTIVE 2002/95/EC FOR RoHS.
2.ALL RIGHTS RESERVED,PRODUCTS ARE COVERED BY PATENTS AND/OR PATENTS PENDING.

QP-04-33-B