✳ REVISIONS				
LTR	DESCRIPTION	DATE	REVISED	APPROVED

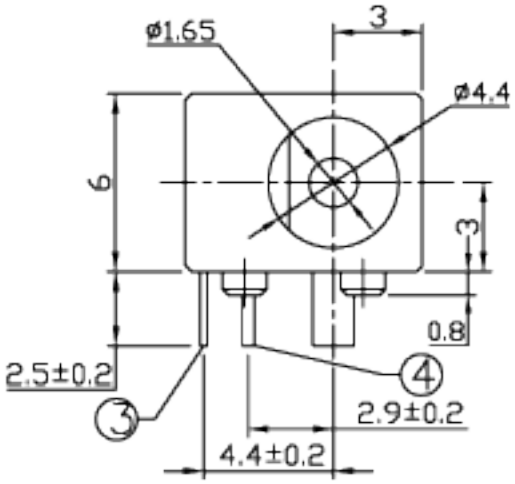

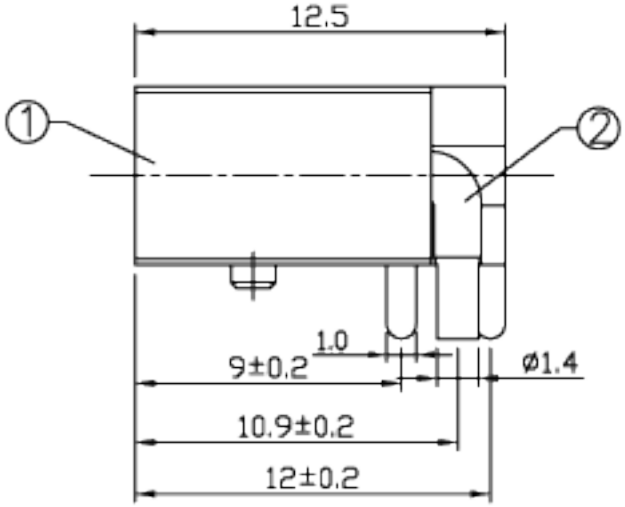

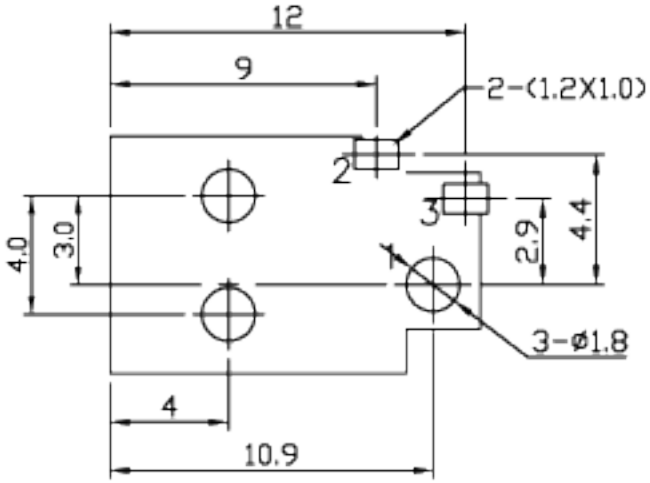

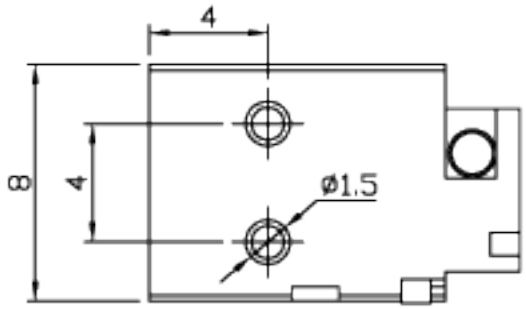

T:1.6 Dimensions of PC board holes

Tolerance : ±0.1(Printed-top view)

SCHEMATIC

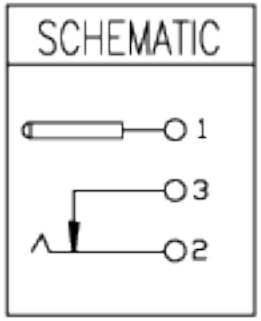

LEAD FREE

LTR	PART NAME	QTY	MATERIAL	REMARK
4	CURVE PIEVE	1	BRASS	MB:Cu Ag PLATED
3	SPRING	1	BRONZE	MB:Cu Ag PLATED
2	PIN	1	BRASS	MB:Cu Ni PLATED
1	HOUSING	1	PBT	

DSND	XIAO CUI	DATE	2006.01.13	3RD ANGLE PROJECTION	NAME DC POWER JACK
DWN	HU LUN	DATE	2006.01.13		
CHKD	GAO WEI	DATE	2006.01.13		CAT. NO. WTJ-020-08
APVD	JACKY	DATE	2006.01.13	UNIT: mm	

Wellco T&C Co., Ltd.

DWN.NO. XRJ-020-08 001

UNLESS OTHERWISE SPECIFIED, TOLERANCE ON DECIMAL: ±0.3