✱ REVISIONS				
LTR	DESCRIPTION	DATE	REVISED	APPROVED

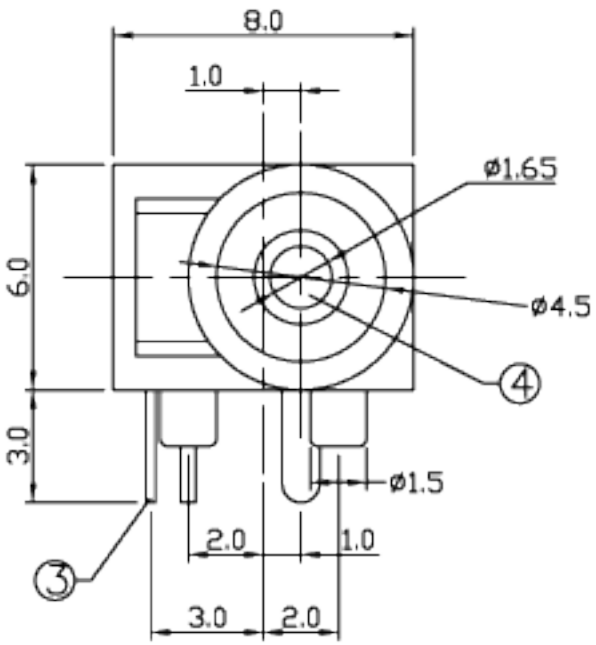

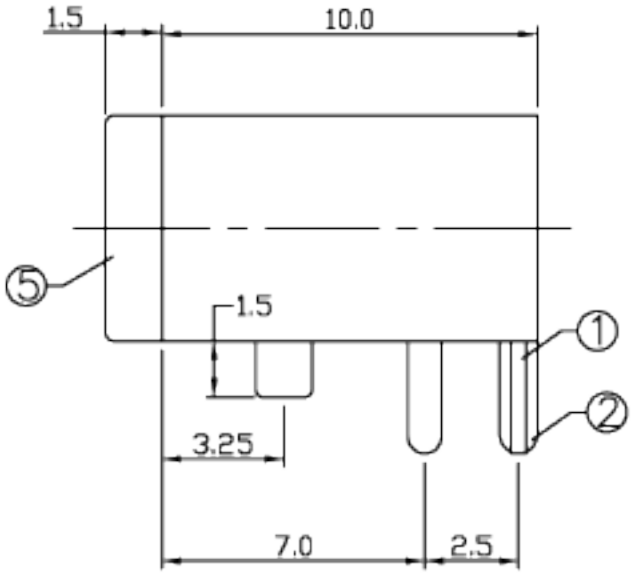

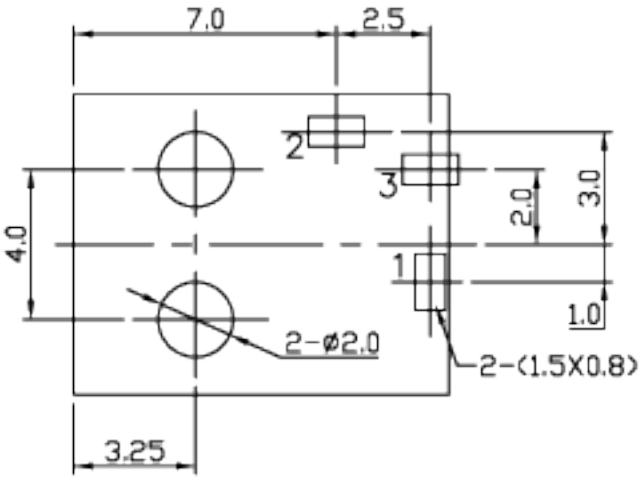

T:1.6 Dimensions of PC board holes

Tolerance : ±0.1(Printed-top view)

SCHEMATIC

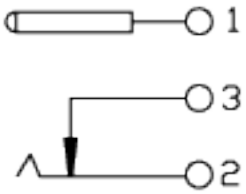

LEAD FREE

LTR	PART NAME	QTY	MATERIAL	REMARK
5	HOUSING	1	PBT	
4	PIN	1	BRASS	MB:Cu Ni PLATED
3	SPRING PIECE	1	STAINLESS STEEL	MB:Cu Ag PLATED
2	CURVE PIECE	1	BRASS	MB:Cu Ag PLATED
1	FLAT PIECE	1	BRASS	MB:Cu Ag PLATED

DSND	XIAO CUI	DATE	2006.01.13	3RD ANGLE PROJECTION	NAME DC POWER JACK
DWN	HU LUN	DATE	2006.01.13		
CHKD	GAO WEI	DATE	2006.01.13		CAT. NO. WTJ-020-09
APVD	JACKY	DATE	2006.01.13	UNIT: mm	
Wellco T&C Co., Ltd.					DWN.NO. XRJ-020-09 001

UNLESS OTHERWISE SPECIFIED, TOLERANCE ON DECIMAL: ±0.3