✱ REVISIONS				
LTR	DESCRIPTION	DATE	REVISED	APPROVED

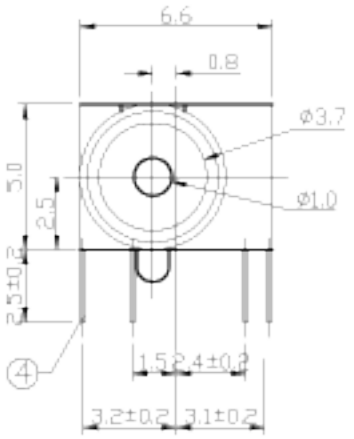

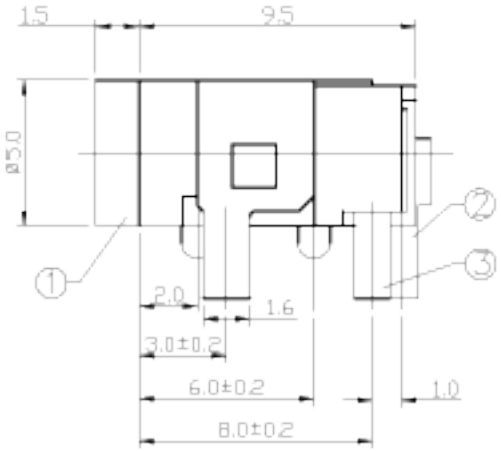

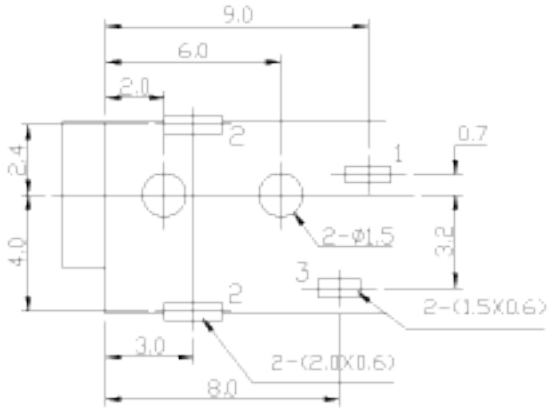

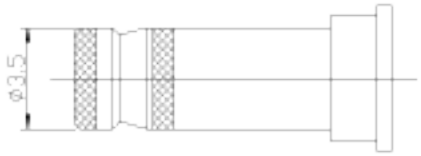

T:1.6 Dimensions of PC board holes

Tolerance : ±0.1(Printed-top view)

CAT. NO.	PIN	SCHEMATIC
WTJ-020-44	ø1.0	1 2 3

UNLESS OTHERWISE SPECIFIED, TOLERANCE ON DECIMAL: ±0.3

LEAD FREE

LTR	PART NAME	QTY	MATERIAL	REMARK
4	CONTACT FOOT	1	BRONZE	MB:Cu Ag PLATED
3	SPRING	1	BRONZE	MB:Cu Ag PLATED
2	PIN	1	BRONZE	MB:Cu Ag PLATED
1	HOUSING	1	PBT	

DSND	XIAO CUI	DATE	2006.01.13	3RD ANGLE PROJECTION	NAME DC POWER JACK
DWN	HU LUN	DATE	2006.01.13		
CHKD	GAO WEI	DATE	2006.01.13		CAT. NO. WTJ-020-44
APVD	JACKY	DATE	2006.01.13	UNIT: mm	

Wellco T&C Co., Ltd.

DWN.NO. XRJ-020-44 001