REV	Date	Instruction
1.3	2009/07/21	Modify Draw ▲

[43010700] SERIES

PCMCIA,With Guide,Double Deck, Board Right Ejector Bar, Screw Type

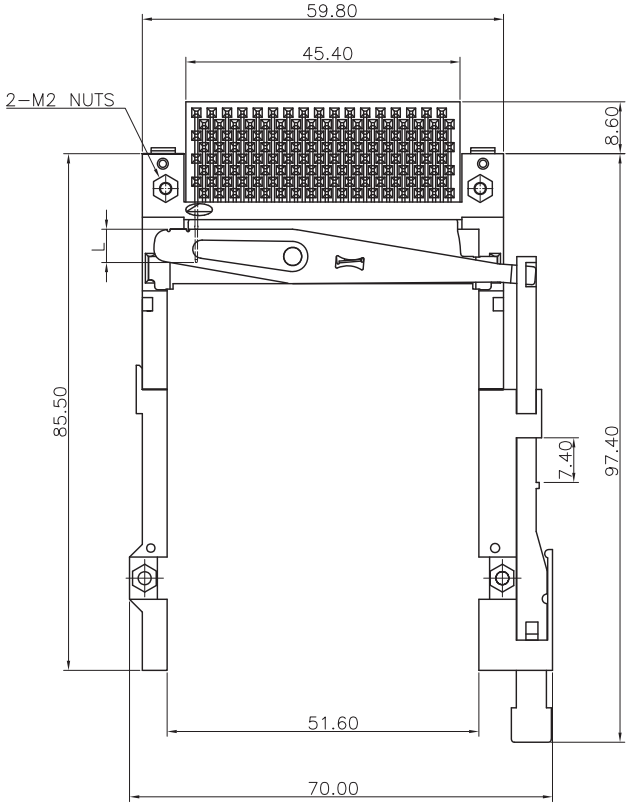

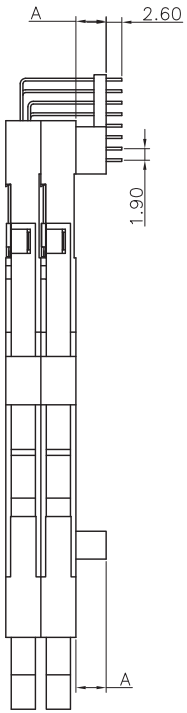

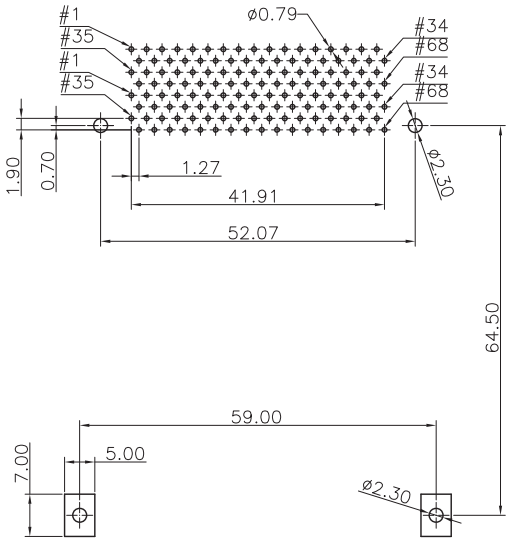

TOP VIEW

PCB LAYOUT RECOMMENDED

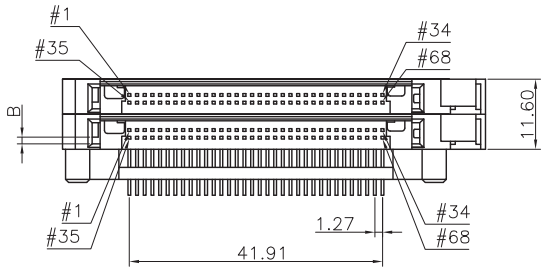

PIN TYPE	DIM L±0.10	PIN NO.
DETECT	3.50mm	36,67
GENERAL	4.25mm	ALL OTHER PINS
POWER	5.00mm	1,17,34,35,51,68

DIM B
5.0V=1.1mm
3.3V=2.2mm
DIM A
4.0mm
5.0mm
5.5mm

Physical:

Housing: LCP, UL 94V-0
Contact: Copper Allay

Specifications:

Voltage Current Rating: 0.5A. 200V AC
Insulation Resistance: 1000M ohm min
Contact Resistance: 20m ohm max
Dielectric Withstanding Voltage:
AC 500V For 1 Minute
Temperature Rating: -20°C To +60°C
Wave Soldering temperature:
▲ **Lead Part:** 245±5°C,5sec
RoHS Part: 260±5°C,5sec

ORDERING CODE

43010700 03 00 01 -LF
1 2 3 4 5

1.SERIES NO.
2.STAND OFF
03=4.0mm 04=5.0mm
05=5.5mm
3.VLTAGE
00=3.3V 01=5.5V
4.PLATED
01=SELECTIVE GOLD FLASH
06=SELECTIVE GOLD PLATED 15u"
5.PRODUCT'S STATUS
NON-SHOWED=STANDARD TYPE
LF=RoHS COMPLIANT

REV.	DATE	APPD.	CHR.	DR.
1.0	2003/04/29	DENNIS	DAVID	MAY
1.2	2005/05/09	DENNIS	DAVID	DDP
1.3	2009/07/21	BING	YI	YI

TOLERANCE UNLESS OTHERWISE SPECIFIED	
LINEAR	0.0±0.25
	0.00±0.15
ANGLES	±3

ENGINEER DWG

UNIT:mm

SIZE: A4

Wellco T&C Co., Ltd.

TITLE	PCMCIA CARD
DWG NO.	43010700XXXXXX
SCALE	1:1
SHEET	1 OF 1