* REVISIONS				
LTR	DESCRIPTION	DATE	REVISED	APPROVED

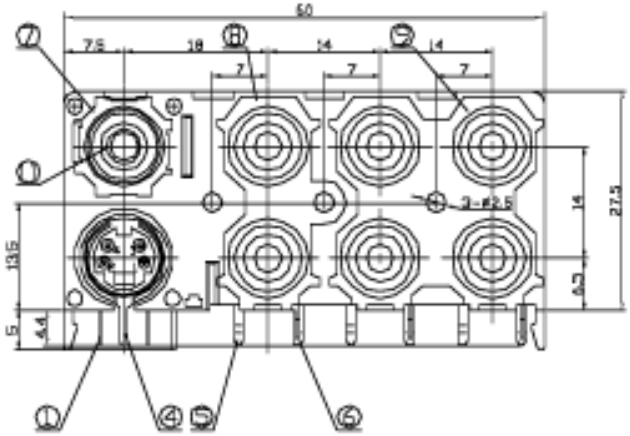

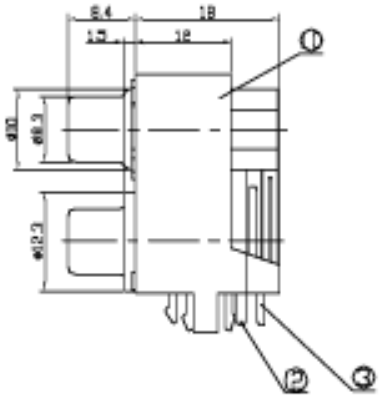

SCHEMATIC				
TYPE	A	B	C	D
		E	F	G
COLOR				

SCHEMATIC	
S JACK	PIN JACK

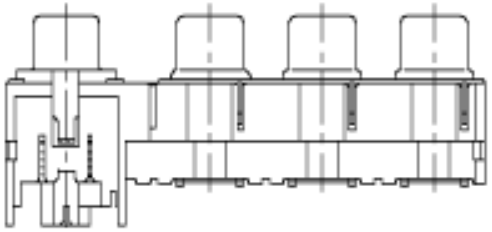

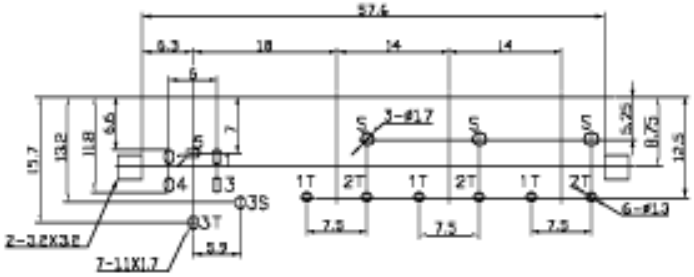

T:1.6 Dimension of PC board holes
Tolerance : ±0.1 (Printed-bottom View)

UNLESS OTHERWISE SPECIFIED, TOLERANCE ON DECIMAL: ±0.3

LTR	PART NAME	QTY	MATERIAL(THICK,COLOR)		REMARK
11	WASHER	7	ABS		
10	HOUSING	1	ABS		
9	OUTER CONTACT (4P)	1	H62y	t=0.4	MB:Cu Ni PLATED
8	OUTER CONTACT (2P)	1	H62y	t=0.4	MB:Cu Ni PLATED
7	OUTER CONTACT (1P)	1	H62y	t=0.4	MB:Cu Ni PLATED
6	TERMINAL	3	QSn6.5-0.1y	t=0.4	MB:Cu Cu/Sn PLATED
5	TERMINAL	3	QSn6.5-0.1y	t=0.4	MB:Cu Cu/Sn PLATED
4	GROUND CONTACT	1	H62y	t=0.35	MB:Cu Ni PLATED
3	TERMINAL	1	H62y	t=0.5	MB:Cu Cu/Sn PLATED
2	TERMINAL	1	H62y	t=0.35	MB:Cu Cu/Sn PLATED
1	TERMINAL	4	QSn6.5-0.1y	t=0.4	MB:Cu Cu/Sn PLATED

DSND	ANDY	DATE	2004.01.14	SCALE 1.6/1	NAME PIN JACK
DWN	ANDY	DATE	2004.01.14	3RD ANGLE PROJECTION	
CHKD	LILY	DATE	2004.01.14		CAT. NO. WT-04064
APVD	LACKY	DATE	2004.01.14	UNIT: mm	

Wellco T&C Co., Ltd.

DWN.NO. SJ-04064 001