* REVISIONS				
LTR	DESCRIPTION	DATE	REVISED	APPROVED

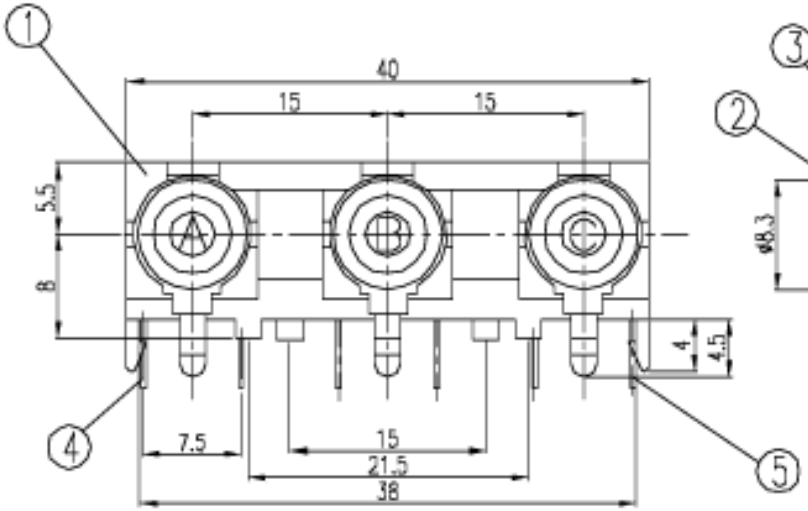

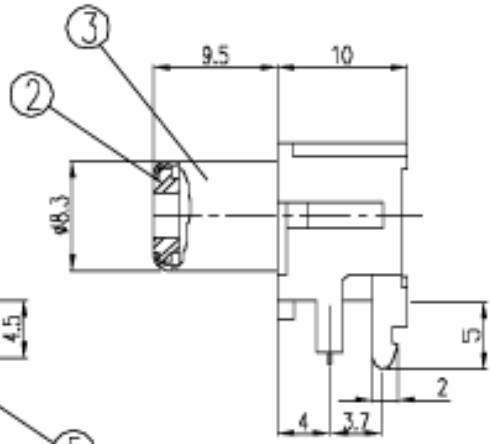

SCHEMATIC		
WTJ-032-33A-		
COLOR		
A	B	C
YELLOW	WHITE	RED

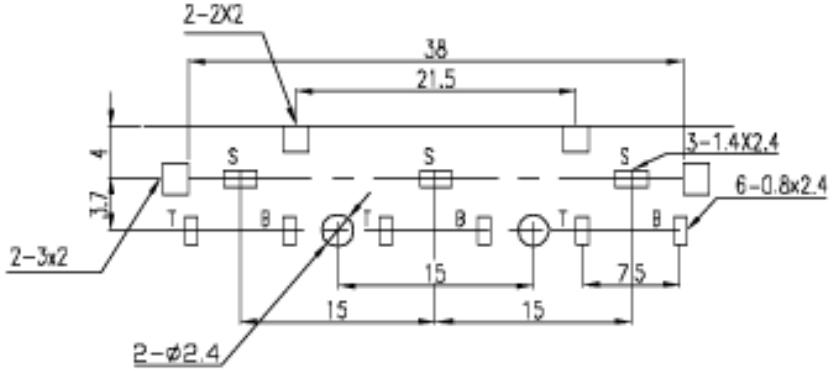

T:1.6 Dimensions of PC board holes

Tolerance : ±0.1(Printed-bottom view)

UNLESS OTHERWISE SPECIFIED, TOLERANCE ON DECIMAL: ±0.3

LTR	PART NAME	QTY	MATERIAL	REMARK
5	SHUNT SPRING	3	H62 t=0.3	MB:Cu Ag PLATED
4	TIP SPRING	3	QSn6.5-0.1y t=0.3	MB:Cu Ag PLATED
3	OUTER CONTACT	3	H65 t=0.4	MB:Cu Ni PLATED
2	WASHER	3	ABS-777D	
1	HOUSING	1	PBT	

DSND	ANDY	DATE	2002.10.15	3RD ANGLE PROJECTION	NAME PIN JACK
DWN	ANDY	DATE	2002.10.15		
CHKD	LILY	DATE	2002.10.15		CAT. NO. WTJ-032-33A
APVD	JACKY	DATE	2002.10.15	UNIT: MM	
Wellco T&C Co., Ltd.					DWN.NO. SJ-032-33A 001