ROHS

ITEM	PART NAME	MATERIAL	NUM	COLOR	FINISHING	REMARK

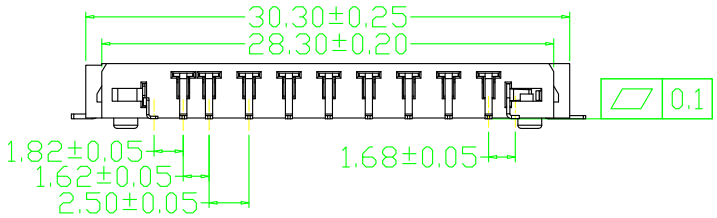

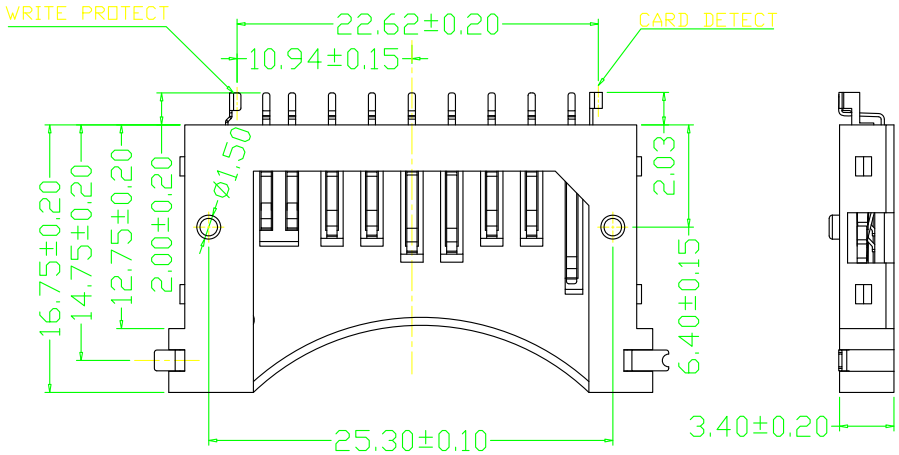

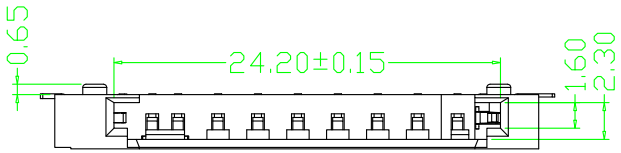

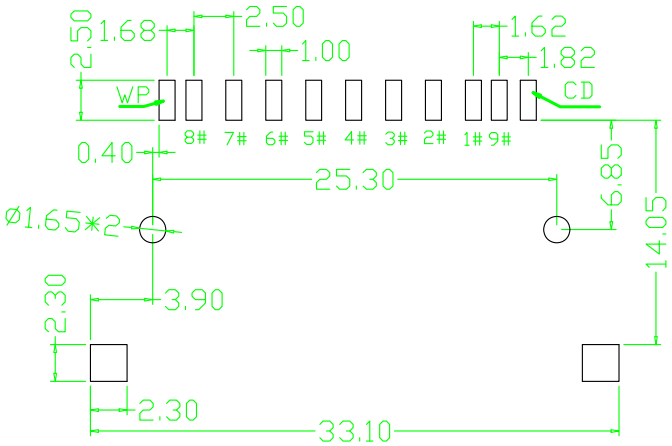

Pin No.	NAME
1	CD/DAT3
2	CMD
3	Vss1
4	VDD
5	CLK
6	Vss2
7	DAT0
8	DAT1
9	DAT2

NOTES:
Current Rating: 0.5A AC,DC
Temperature Range: −20°C~+60°C
Contact Resistance: 40mΩ max
Insulation Resistance: 1000MΩ min
Withstanding Voltage: 500V AC/minute
Material: LCP UL 94V-0

Part No: QH-42801-A

Wellco T&C Co., Ltd.

TOLERANCE		
X.	±0.38	X.° ±4°
X.X	±0.25	X.X°±2°
X.XX	±0.20	
X.XXX	±0.15	

PROJECTION

REV.	REVISIONNOTE	DATE
	新发行	

DRAWN	Wesker
DES'D	
CHK'D	
APPV'D	

ARTICLE: SD板下11P全塑卡座

MODEL: SD-112801 REV: A

SCALE: 1:1 UNIT: mm SHEET: 1/1