ELECTRICAL SPECS: △02
- VMPP = 2.5-2.8V

△02 △01

ITEM NO.	PART NUMBER	DESCRIPTION	MATERIAU	SUPPLIER	SKU SUPPLIER	QTY.
1	10340	V250 SOLAR PANEL 84X140MM	VARIABLE	N/A	N/A	1
2	N/A	WIRE STRANDED 24AWG 11/34 30VMIN -30°C ~ 90°CMIN L TBDMM BK UL	TINNED COOPER	N/A	N/A	1
3	N/A	WIRE STRANDED 24AWG 11/34 30VMIN -30°C ~ 90°CMIN L TBDMM RED UL	TINNED COOPER	N/A	N/A	1
4	N/A	CRIMP MOLEX AWG #24-#26 TIN-PLATED 87421-0000	PHOSPHOR BRONZE	MOLEX	87421-0000	2
5	N/A	EL CON MOLEX 2PINS X AWG#24-#26 NATURAL 874390200	PA UL94-V0	MOLEX	874390200	1

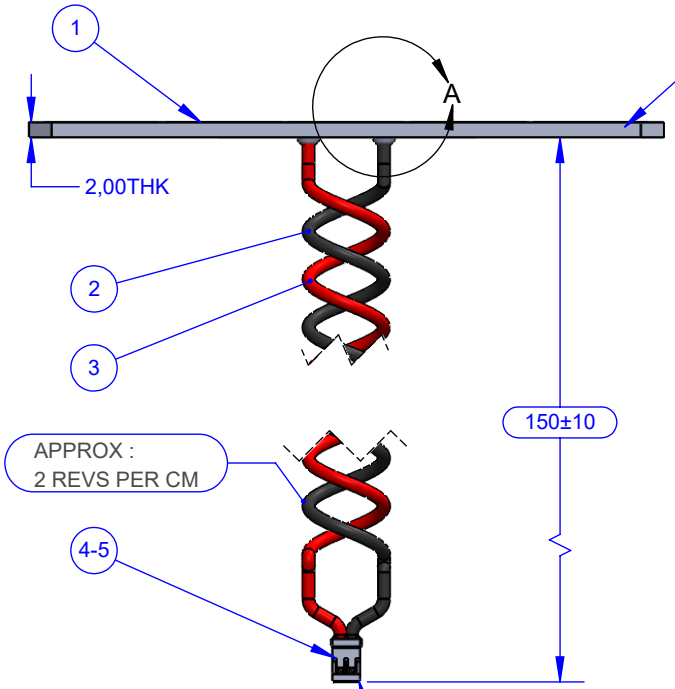

IMPORTANT:
ENSURE WEATHER PROTECTION ALL AROUND. IT WILL BE EXPOSED OUTDOOR WEATHER

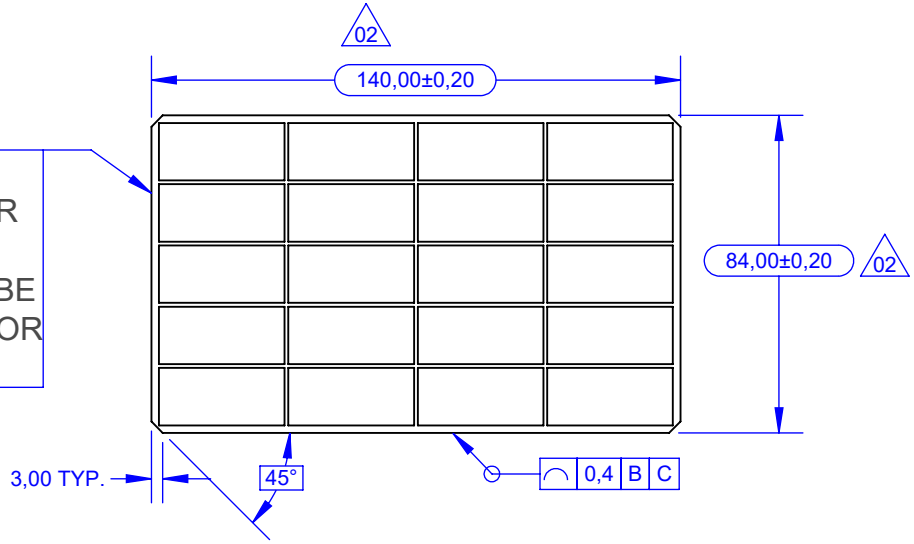

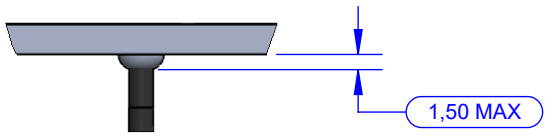

DETAIL A
SCALE 2 : 1

FOLLOW CONN AND CRIMPS REQUIREMENTS FOR GOOD INSTALLATION

PINOUT:
#1 : + RED
#2 : - BK

NOTES:
1- FOR ADDITIONAL VALUES REFER TO 3D MODEL
2- TOLERANCING AS PER ASME Y14.5-2018
3- ALL UNTOLERANCED DIMENSIONS ARE BASICS

1	A	B	C	ALL OVER

3 - ASSEMBLY NEED TO BE FREE OF WELD PROJECTIONS UNLESS OTHERWISE SPECIFIED
4- PART NEEDS TO BE FREE OF BURRS AND SHARP EDGES

ALL DIMENSIONS ARE IN MM.

REVISIONS			
REV.	DESCRIPTION	DATE (DD/MM/YY)	REV. BY
01	CHANGE CELL LAYOUT & ADD ELECTRICAL DETAILS	04/07/23	EML
02	ADD SURFACE 74 TO 84mm & 130 TO 140mm, ADJUST THE SOLAR CELL LAYOUT & ADD ELEC SPECS	03/08/23	EML

Wellco T&C Co., Ltd.	AUTHOR: EML	DATE: 23/01/23	DRAWING TITLE: AS V250 SOLARPANEL WITH CONN		DRAWING No.: X10339	REVISION No.: R02
DRAWING PURPOSE: **FOR QUOTE**	DRAW BY: EML	DATE: 29/06/23	MATERIAL: SEE BOM		WEIGHT (grams): TBD	
PROJECT No. AND NAME: V250	ENG APP: YYYYY	DATE: DD/MM/YY	FINISH: UNSPECIFIED		SCALE: 1:2	SHT No.: 1 / 2

FINISH :
- LINKED TO SPECS

SURFACE QUALITY :
- LINKED TO SPECS

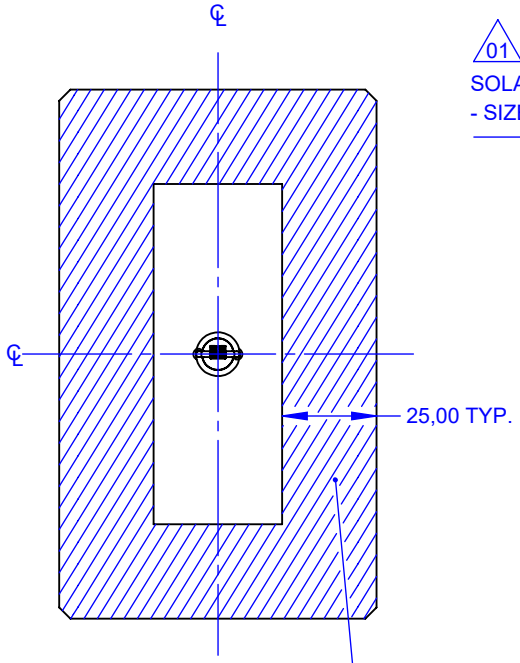

01 02
SOLAR CELL HORIZONTAL
- SIZE & QTY OF CELL : 5X4 (ROWS X COLUMN)

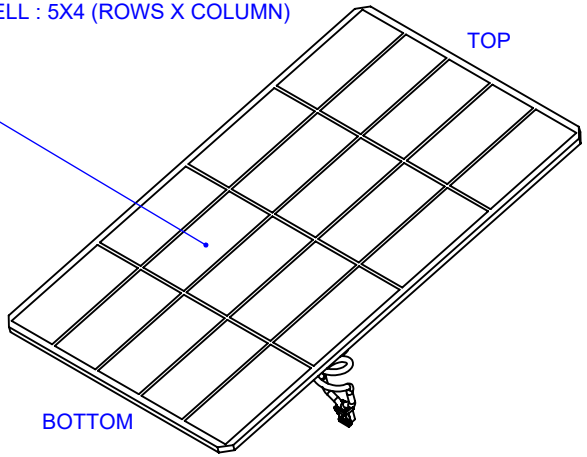

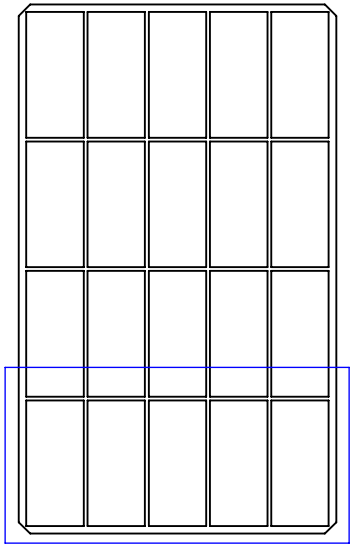

01 ELECTRICAL LAYOUT:
- ENSURE OPTIMAL CHARGING WHEN BOTTOM THIRD OF THE ENTIRE PANEL (1/3) IS BLOCKED BY SNOW

NOTES:
1- FOR SURFACES QUALITY REFER TO LATEST VERSION OF: VOS-SPY_SURFACEQUALITY&COATINGSPECS_RXX.PDF

ALL DIMENSIONS ARE IN MM.

EJECTOR PINS:
- EJECTOR PINS NEED TO BE FLUSH OR RECESSED
- NO EJECTOR PINS OR MARKING FROM EJECTORS ON THE EXTERNAL SURFACES
- NO EJECTOR PINS ON SEALING SURFACES IF APPLICABLE

Wellco T&C Co., Ltd.	AUTHOR: EML	DATE: 23/01/23	DRAWING TITLE: AS V250 SOLARPANEL WITH CONN	DRAWING No.: X10339	REVISION No.: R02	
DRAWING PURPOSE: **FOR QUOTE**	DRAW BY: EML	DATE: 29/06/23	MATERIAL: SEE BOM	WEIGHT (grams): TBD		
PROJECT No. AND NAME: V250	ENG APP: YYYYY	DATE: DD/MM/YY	FINISH: UNSPECIFIED	SCALE: 1:2	SHT No.: 2 / 2	