ITEM NO.	DESCRIPTION	MATERIAL	SUPPLIER	SKU SUPPLIER	QTY.
1	WIRE STRANDED 24AWG 11/34 30VMIN -30°C ~ 90°CMIN L TBDMM BK UL	TINNED COPPER	N/A	N/A	10
2	ZPD DISCONNECTABLE CRIMP STYLE CONNECTOR	PBT UL94-V0 NATURAL	JST	ZPDR-10V-S	2
3	SZPD-002T-P0.3	COPPER ALLOY / TIN PLATED	JST	SZPD-002T-P0.3	20

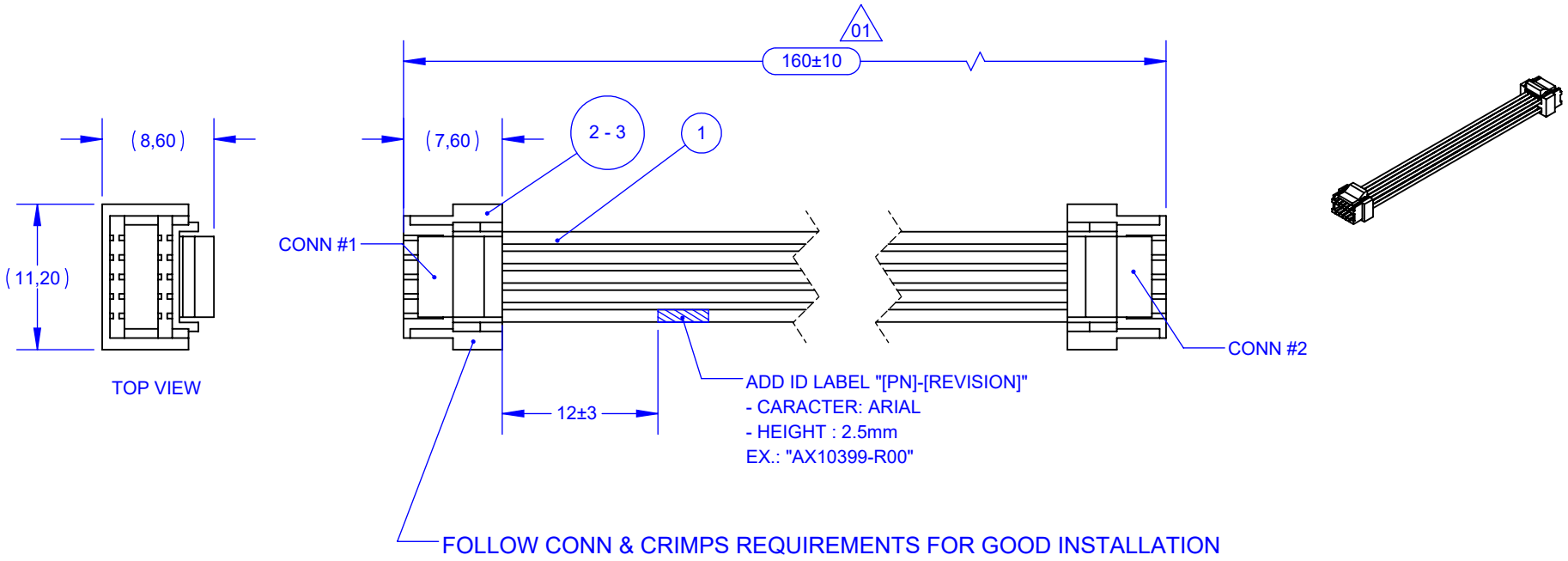

PIN OUT:
CONN #1 TO CONN #2
1 TO 9
2 TO 10
3 TO 7
4 TO 8
5 TO 5
6 TO 6
7 TO 3
8 TO 4
9 TO 1
10 TO 2

NOTES:
1- FOR ADDITIONAL VALUES REFER TO 3D MODEL
2- TOLERANCING AS PER ASME Y14.5-2018
3- PART NEEDS TO BE FREE OF BURRS AND SHARP EDGES

ALL DIMENSIONS ARE IN MM.

REVISIONS

REV.	DESCRIPTION	DATE (DD/MM/YY)	REV. BY
01	REDUCE WIRE LENGTH	14/12/23	IPM
00	INITIAL RELEASE	17/10/23	EML

Wellco T&C Co., Ltd.	AUTHOR: EML	DATE: 17/10/23	DRAWING TITLE: AS EL CON CHARGER TO MAIN 10P	DRAWING No.: X10399	REVISION No.: R01	
DRAWING PURPOSE: **FOR FABRICATION**	DRAW BY: EML	DATE: 17/10/23	MATERIAL: SEE BOM	WEIGHT (grams): N/A		
PROJECT No. AND NAME: **V250**	ENG APP: YYYYY	DATE: DD/MM/YY	FINISH: N/A	SCALE: 2:1	SHT No.: 1 / 1	